CUSTOMER NO:	REMARK

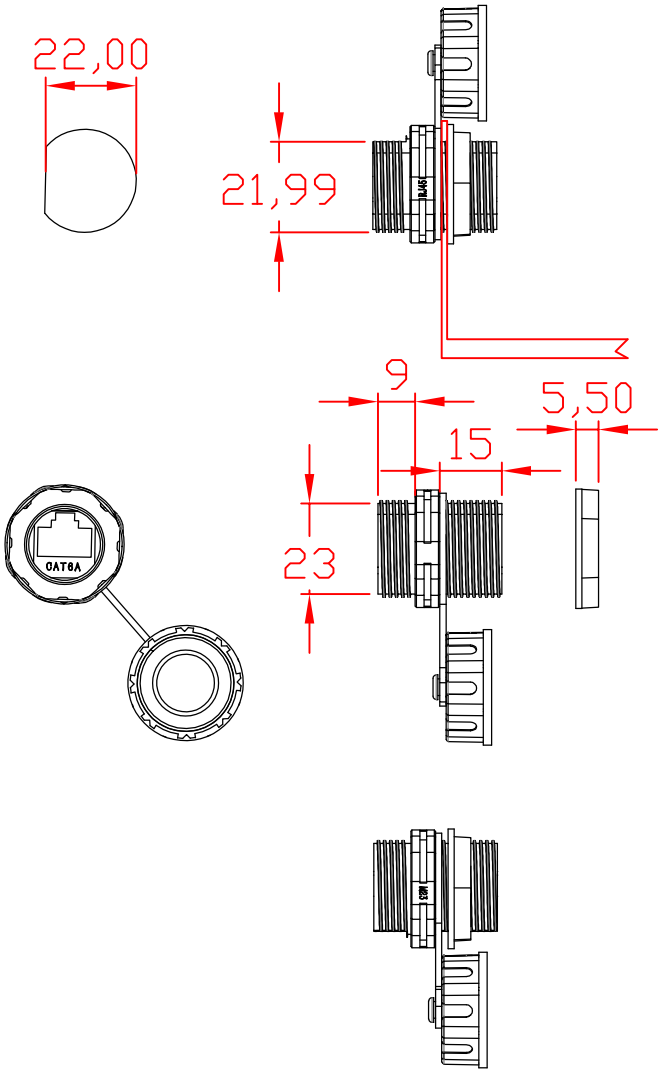

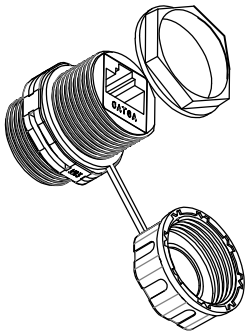

PINOUT:

P2	P1
1	1
2	2
3	3
4	4
5	5
6	6
7	7
8	8
shield	shield

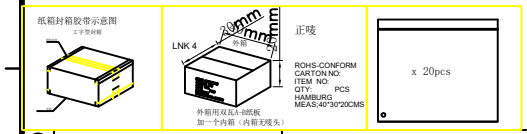

NO.	MATERIAL P/N	DESCRIPTION	Q'TY	Unit
4	YCRJ45-CAT6	CAT6 Shield network Coupler connector	1	pcs
3	YLJL-PVC80B-02	PVC 80P blue	2	g
2	FS-GJQ-04	O-type silicone ring22*17*2.5 blue	2	pcs
1	YLJL-NL-01	NYLON PA66	2	g

REV.	ECR	DESCRIPTION	C.N.	DATE
A		FIEST EDITION	ping	11/01/06

YXY

SHENZHEN YONGXINYUAN ELECTRONIC CO., LTD

UNLESS OTHERWISE SPECIFIDE:
DIMENSIONS ARE IN MILLIMETERS
ANGULAR TOLERANCE: ±1.0°

DIMENSIONS	TOLERANCE
0.00 TO 30.00mm	±0.10mm
30.01 TO 80.00mm	±0.13mm
80.01 TO 150.00mm	±0.15mm
150.01mm ↑	±0.20mm

MATERIAL: MATERIAL
FINISH: FINISH

TITLE: M23 RJ45面板式网络直通

CHKD.
CONF.
DR. ping
APPD.
PART NO.

SCALE: /
SHEET: 1/1
UNIT: CM
SIZE: A4
REV.: A